WESSEL HYDRAULIK	STUFENBOHRUNG RV D16 O-RING Cavity	Part no. 8.00294

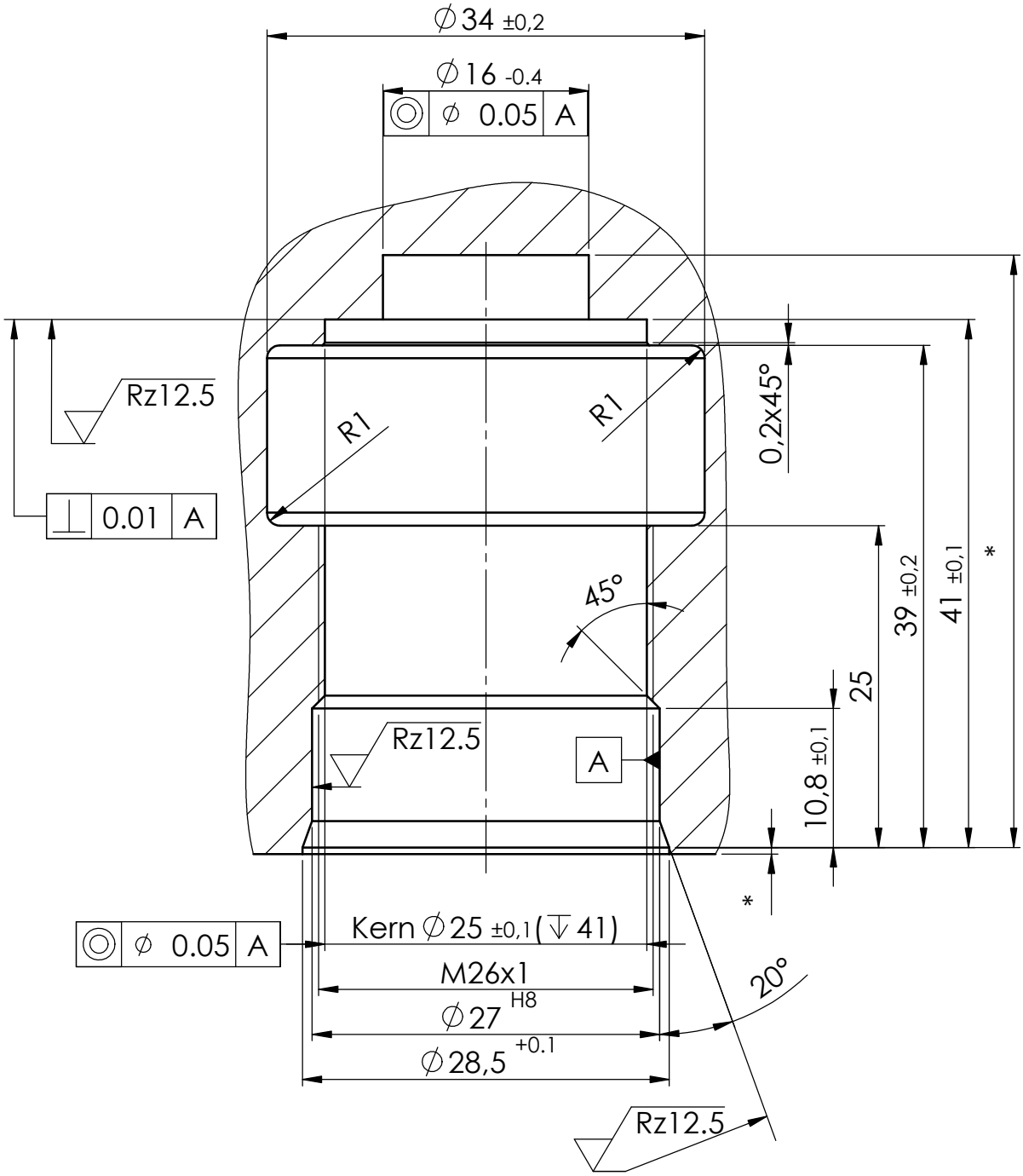

Bore diameter after fitting max. 0.5 mm smaller.

Dimensions in millimeters

workpiece edge DIN EN ISO 13715

-0.2 +0.2

27 H8	+0.033 0
fitting	diameter

doerk	prepared on	29.09.21	changed on	09.02.2023	ID-Nr.8.00294		index: 00	page	1	von	1

we engineer your progress