FDV-CA

Flow Divider, Cartridge type or with manifold

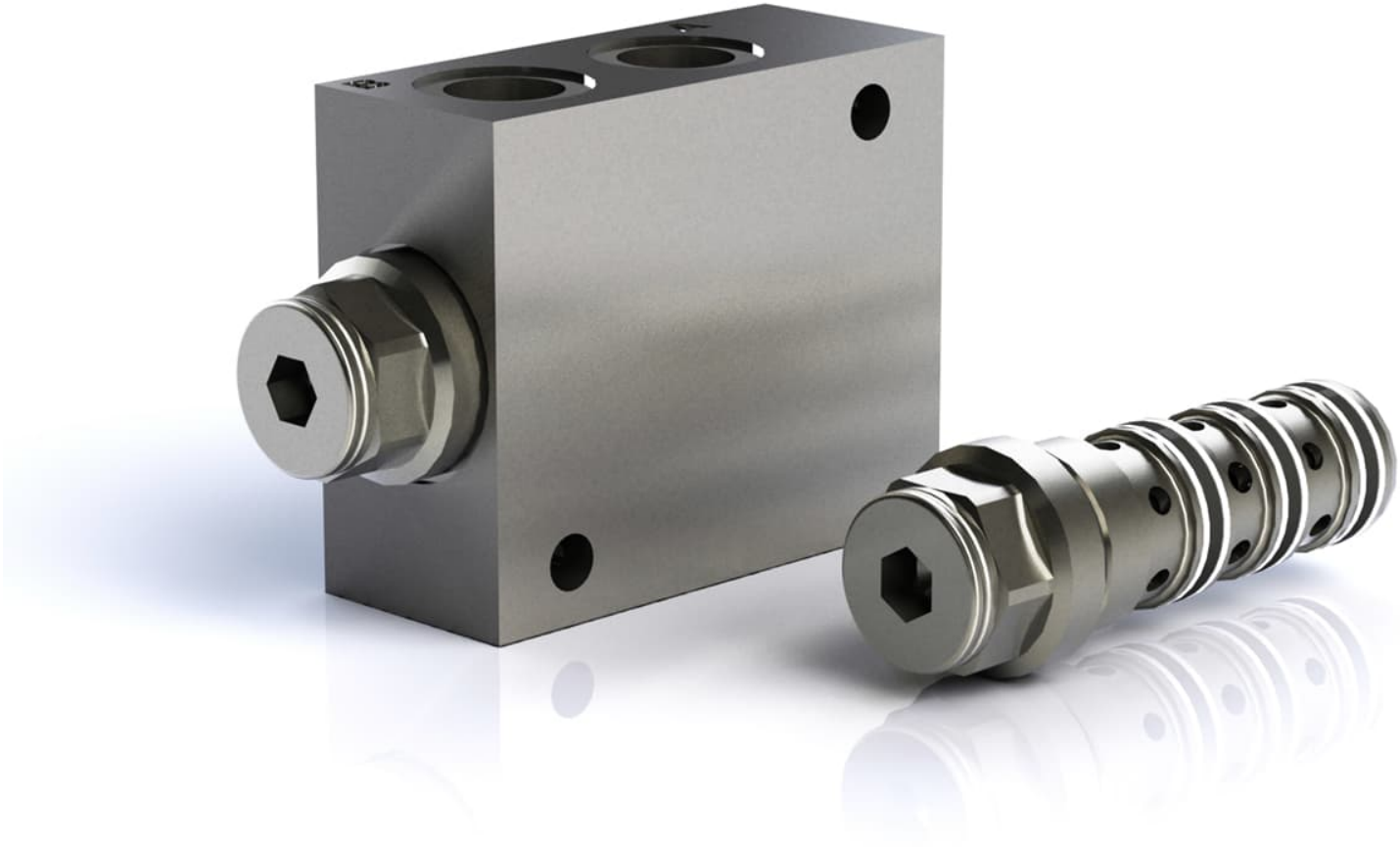

Table of Contents

1 Function

The flow divider valve type FDV-CA splits an inlet flow rate independently of the pressure conditions in two fixed partial flows. The split ratio is predetermined by design. Various split ratios are available. The flow through the valve is always from C to A and B. The valve is available as cartridge type as well as a cartridge valve in a manifold.
The valve is e.g. suitable for steering systems.

1.1 Properties

- excellent split ratio
- robust design
- split ratios can be predetermined to customer needs

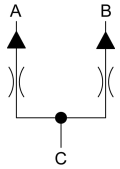

2 Technical Data

Weight with body	1,9 kg
Maximum port pressure (A,B,C)	420 bar
Max. volume flow	see table
Port C supply port	G1/2" ISO 1179-1
Port A, B actuator port	G1/2" ISO 1179-1

surface	electroplating coated
Hydraulic fluid	Mineral oil (HL, HLP) conforming with DIN 51524, other fluids upon request
Hydraulic fluid pressure range	see table
Ambient temperature	Ambient temperature
Viscosity range	2,8 – 500 mm²/s
Contamination grade	Filtering conforming with NAS 1638, class 9, with minimum retention rate β10≥75

3 Ordering informationen

FDV	CA			420	02	
00	01	02	03	04	05	06

00	Product group	Flow Divider		FDV
01	Design	Cartridge-design		CA
02	With manifold: port. A, B, C	G1/2A :ISO 1179-1 BSPP parallel small		03D
	Cartridge	Cavity 8.00135		135
03	Inlet volume flow	40 l/min		040
		70 l/min		070
04	Maximum pressure	420 bar		420
05	Number of outlet ports	2 outlet ports		02
06	Dividing ratio	1:1	50:50	00
		1:4	20:80	01
		1:1,5	40:60	02
		1:2	33:67	03
		1:3	25:75	04
		1:1,25	44,4:55,6	05
		1:1,2	45,5:54,5	06
07	Hydraulic medium temperatue range	-20 bis +80°C		20
		-40 bis +80°C (low temperature seals)		40

Some theoretical configurations might be not feasible for technical reasons. For relating questions please ask for our advice.

3.1 Versions currently available

The versions listed below are available as standard. Further versions as part of the options given on the type code can be configured upon request. Therefore normally minimum order quantities are required.

Type code	Description	Part-No.
FDV-CA-03D-040-420-02-05-20	FDV-CA body 40lpm 420bar 2 outlet ports 1:1,25 -20 bis+80°C	431.082.601.9
FDV-CA-03D-040-420-02-04-20	FDV-CA body 40lpm 420bar 2 outlet ports 1:3 -20 bis+80°C	431.082.602.9
FDV-CA-03D-040-420-02-03-20	FDV-CA body 40lpm 420bar 2 outlet ports 1:2 -20 bis+80°C	431.082.603.9
FDV-CA-03D-040-420-02-02-20	FDV-CA body 40lpm 420bar 2 outlet ports 1:1,5 -20 bis+80°C	431.082.604.9
FDV-CA-03D-040-420-02-00-20	FDV-CA body 40lpm 420bar 2 outlet ports 1:1 -20 bis+80°C	431.082.605.9
FDV-CA-03D-040-420-02-01-20	FDV-CA body 40lpm 420bar 2 outlet ports 1:4 -20 bis+80°C	431.082.606.9
FDV-CA-03D-040-420-02-04-20	FDV-CA body 40lpm 420bar 2 outlet ports 1:1,3 -20 bis+80°C	431.082.608.9
FDV-CA-03D-070-420-02-03-20	FDV-CA body 40lpm 420bar 2 outlet ports 1:2 -20 bis+80°C	431.082.620.9
FDV-CA-03D-070-420-02-06-20	FDV-CA body 40lpm 420bar 2 outlet ports 1:1,2 -20 bis+80°C	431.082.622.9
FDV-CA-03D-070-420-02-00-20	FDV-CA body 40lpm 420bar 2 outlet ports 1:1 -20 bis+80°C	431.082.623.9
low temperature seals		
FDV-CA-135-040-420-02-01-40	FDV-CA body 40lpm 420bar 2 outlet ports 1:4 -20 bis+80°C	431.082.607.9
FDV-CA-135-040-420-02-04-40	FDV-CA body 40lpm 420bar 2 outlet ports 1:1,3 -20 bis+80°C	431.082.609.9
FDV-CA-135-070-420-02-03-40	FDV-CA body 40lpm 420bar 2 outlet ports 1:2 -20 bis+80°C	431.082.621.9

4 Description of Characteristics in Accordance with Type Code

4.1 Design

- Cartridge design
- Cartridge in body

4.2 Connections

A, B, C - G1/2 ISO 1179-1

4.3 Input flow rate

- 40l/min
- 70l/min

4.4 Maximum Pressure

420 bar.

4.5 Number of outlet ports

2

4.6 Dividung ratio

See type code

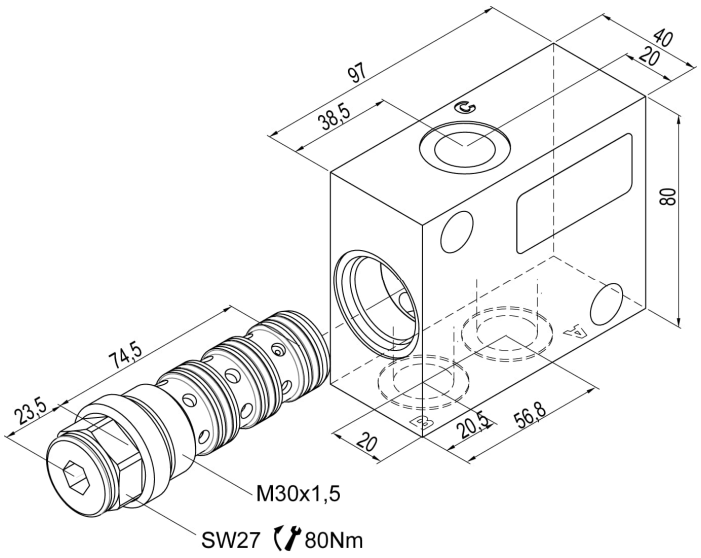

5 Installation

5.1 General Instructions

- Observe all installation and safety information of the machine manufacturer.
- Only technically permitted changes are to be made on the machine.
- The user has to ensure that the device is suitable for the respective application.
- Application exclusively for the range of application specified by the manufacturer.
- Before installation or deinstallation, the hydraulic system is to be depressurized.
- Settings are to be made by qualified personnel only.
- Opening is only to be performed with the approval of the manufacturer, otherwise the warranty is invalidated.
- No responsibility is taken for the correctness of these installation recommendations, the functionality and the technical details of the machine must be checked.

Safety note: To protect the internal pilot shuttle valve, the inlet pressures in ports 1 and 2 must not suddenly reverse (e.g. by using a switched 4/2 or 4/3-way valve in the inlet lines).

5.2 Mounting Space

The flow divider valve is screwed into a cavity. Wrench size 27 = Torque 80 Nm. The flow divider valve in a manifold is mounted with 2 bolts M8, tightening torque 25 Nm.

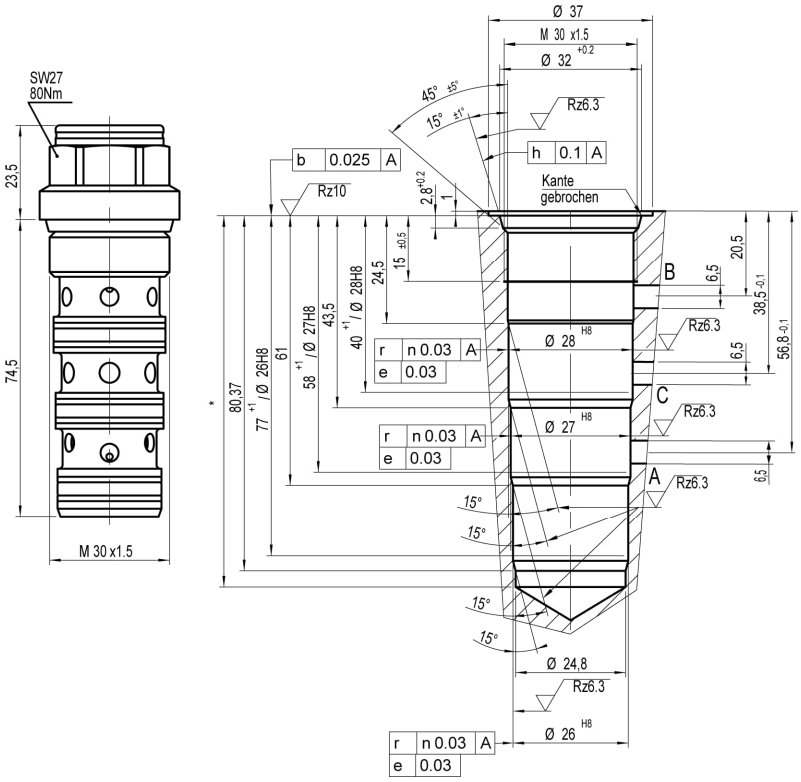

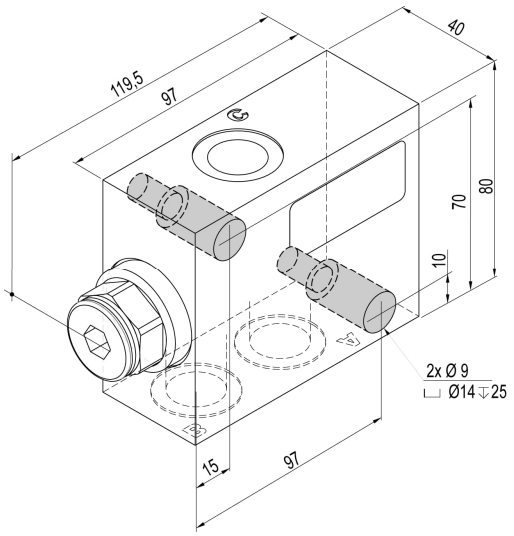

6 Notes, Standards and Safety Instructions

6.1 Allgemeine Hinweise

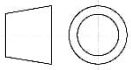

- The views in drawings are shown in accordance with the European normal projection variant
- A comma (,) is used as a decimal point in drawings
- All dimensions are given in mm

6.2 Standards

The following standards must be observed when installing and operating the valve:

- DIN EN ISO 13732-1:2008-12, Temperatures on accessible surfaces
- EN 982, safety requirements for fluid power systems and their components.

7 Accessories